GEMINI

BOLTING TOOLS
CATALOGUE

GPH Series

-700bar maximum working pressure; Repeat accuracy ±3%.
-5 different model from 2625-48481N.m
-Fitted with 360°x360° uni-swivel quick release couplings
-Low profile design to accessing limited areas
-Drivers and adaptors can be replaced easily

H low profile torque wrenches designed for accessing limited areas and serves good solutions with number of replaceable cassettes and adaptors. Drivers can be replaced easily and fast without using any tools. Saves time by means of easy replacement of attachments. Light weight aluminum design allows easy operations even in robust conditions.

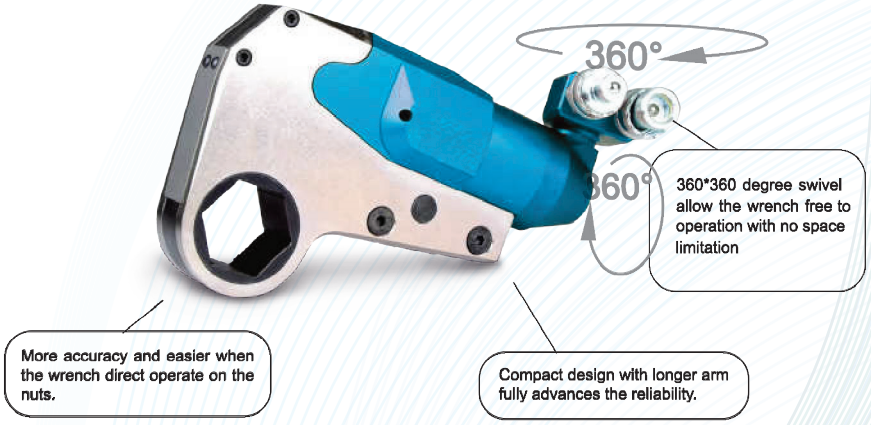

Accessory:

Reaction Pad	
Extending Reaction Arm	

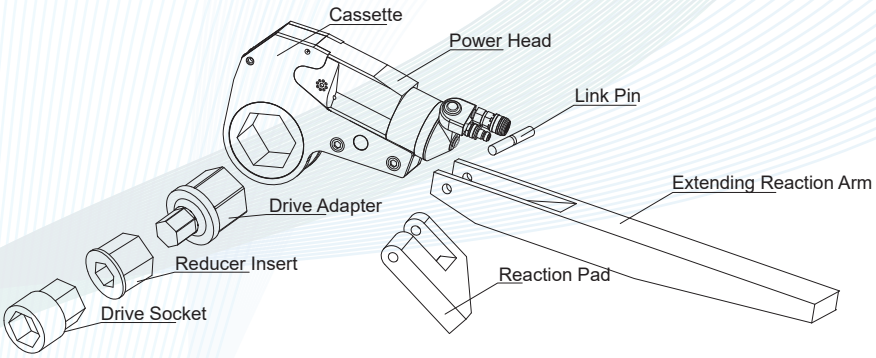

GPH Series Technical Data

model	Torque (N.m)	Bolt size (mm)	Weight (Kg)	Cassette Weight (Kg)	Sizes (mm)					
					L	H1	H2	W1	W2	A
GPH27	262～2625 306～3068	19～46 50～60	0. 9	Max 1.8KG	193 193	125 136	97 108	32 32	51 51	10～15 10～11
GPH54	537～5372 603～6037	27～65 70～80	1. 9	Max 3.8KG	250 250	158 169	125 136	41 41	64 64	11～19 11. 7～12
GPH120	1173～11737 1434～14349	50～80 85～105	3. 4	Max 8.4KG	310 310	189 214	157 182	52 52	78 78	15～15. 2 16～22
GPH210	2121～21216 2312～23124	70～100 105～120	5. 9	Max 13.8KG	378 378	223 236	191 204	64 64	97 97	8～21 18～24
GPH430	4379～43792 4848～48481	80～117 120～175	16 . 1	Max 30 KG	405 * 425 *	291 * 309 *	242 * 260 *	83 83	93 93	25～31 * 25～34 *

GPH Dimension Drawing

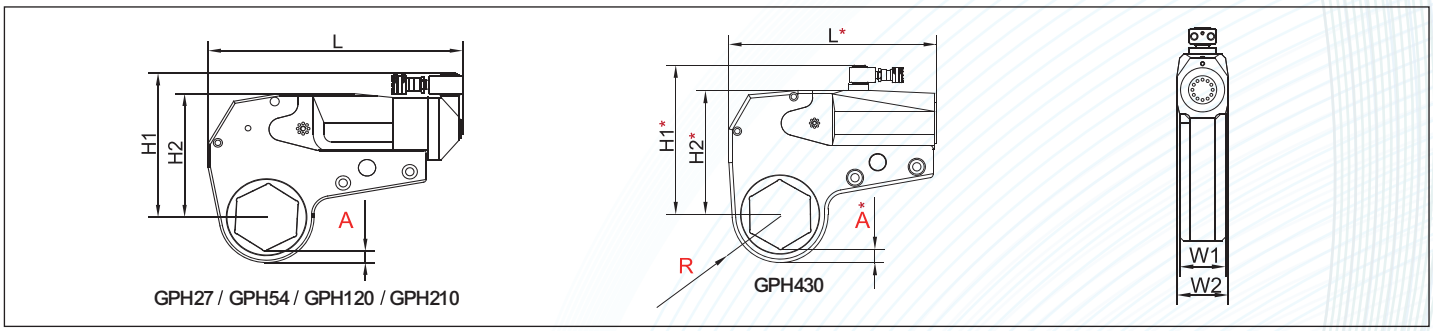

Choice of Cassettes

GPH27				GPH54				GPH120				GPH210				GPH430			
Type	R	A	Max Torque	Type	R	A	Max Torque	Type	R	A	Max Torque	Type	R	A	Max Torque	Type	R	A	Max Torque
GLT 27-19	26	15	2625	GLT 54-27	36	19	5372	GLT120-50	44	15	11737	GLT210-70	59	18	21216	GLT430-80	72	25	43792
GLT 27-22	26	14	2625	GLT 54-30	35	17	5372	GLT120-55	47	15	11737	GLT210-75	62	18	21216	GLT430-85	78	28	43792
GLT 27-27	26	11	2625	GLT 54-32	35	16	5372	GLT120-60	50	15	11737	GLT210-80	65	18	21216	GLT430-90	78	25	43792
GLT 27-30	28	11	2625	GLT 54-34	35	15	5372	GLT120-65	53	15	11737	GLT210-85	68	18	21216	GLT430-95	84	28	43792
GLT 27-32	28	10	2625	GLT 54-36	35	14	5372	GLT120-70	56	15	11737	GLT210-90	71	18	21216	GLT430-100	84	26	43792
GLT 27-34	31	11	2328	GLT 54-41	35	11	5372	GLT120-75	58	15	11737	GLT210-95	74	18	21216	GLT430-105	90	28	43792
GLT 27-36	31	10	2625	GLT 54-46	37	11	5858	GLT120-80	61	15	11737	GLT210-100	77	18	21216	GLT430-110	90	26	43792
GLT 27-41	34	10	2625	GLT 54-50	41	12	5372	GLT120-85	66	16	14349	GLT210-105	79	18	23124	GLT430-115	94	28	43792
GLT 27-46	37	10	2625	GLT 54-55	44	12	5372	GLT120-90	69	16	14349	GLT210-110	82	18	23124	GLT430-117	94	26	43792
GLT 27-50	40	11	3068	GLT 54-60	47	12	5372	GLT120-95	71	16	14349	GLT210-115	87	21	23124	GLT430-120	101	31	48481
GLT 27-55	42	11	3068	GLT 54-65	50	12	5372	GLT120-100	77	19	14349	GLT210-120	87	17	23124	GLT430-125	101	28	48481
GLT 27-60	45	10	3068	GLT 54-70	52	12	6037	GLT120-105	77	16	14349					GLT430-130	101	25	48481
				54-75	56	12	6037									GLT430-135	105	26	48481
				54-80	58	12	6037									GLT430-140	110	29	48481
																GLT430-145	110	26	48481
																GLT430-150	115	29	48481
																GLT430-155	115	26	48481
																GLT430-160	121	29	48481
																GLT430-165	121	26	48481
																GLT430-170	128	30	48481
																GLT430-175	128	27	48481

Gemini can be customized according to customer requirements of special types of cassette.

Industrial Applications: